USEF/USDF # 332656
Level 2

Closing Date: October 26, 2026

Orlando Dressage, Inc.

Dressage Under the Oaks IV

November 7-8, 2026

Official Qualifying Competition for Great American Insurance Group/USDF 2027 Regional Championships

The Grand Oaks Resort — 3000 Marion County Rd. — Weirsdale, FL
Competitor Trailer Entrance—3121 Griffin Ave. - Lady Lake, FL 32159

Judges: Dot Demis,'S',
Manager: Gayle Witty
352-406-9886
wittyhorse@embarqmail.com

TD: Diane Stanley
Show Secretary: Carlie Evans
352-215-0710
orlandodressage@gmail.com

www.orlandodressage.com

We are using a new software program. On line entries are available at www.horsemonkey.com .
You may also download the app for your convenience.

SAT	SUN	FEE	CLASS NAME
IntroA	IntroA-2	$50	USDF Introductory Walk-Trot A
IntroB	IntroB-2	$50	USDF Introductory Walk-Trot B
IntroC	IntroC-2	$50	USDF Introductory Walk-Trot Canter C
TC1	TC2	$50	USDF Introductory Test of Choice
1	101	$50	USEF Training Level Test 1—Open
1A	101A	$50	USEF Training Level Test 1— JR/YR/AA
2	102	$50	USEF Training Level Test 2—Open
2A	102A	$50	USEF Training Level Test 2—JR/YR/AA
3	103	$50	USEF Training Level Test 3—Open & Qualifying
3A	103A	$50	USEF Training Level Test 3- JR/YR/AA & Qualifying
11	111	$50	USEF First Level Test 1-Open
11A	111A	$50	USEF First Level Test 1-JR/YR/AA
12	112	$50	USEF First Level Test 2-Open
12A	112A	$50	USEF First Level Test 2-JR/YR/AA
13	113	$50	USEF First Level Test 3-Open & Qualifying
13A	113A	$50	USEF First Level Test 3- JR/YR/AA& Qualifying
21	121	$50	USEF Second Level Test 1-Open
21A	121A	$50	USEF Second Level Test 1-JR/YR/AA
22	122	$50	USEF Second Level Test 2-Open
22A	122A	$50	USEF Second Level Test 2-JR/YR/AA
23	123	$50	USEF Second Level Test 3- Open & Qualifying
23A	123A	$50	USEF Second Level Test 3-JR/YR/AA & Qualifying
31	131	$50	USEF Third Level Test 1-Open
31A	131A	$50	USEF Third Level Test 1-JR/YR/AA
32	132	$50	USEF Third Level Test 2-Open
32A	132A	$50	USEF Third Level Test 2-JR/YR/AA
33	133	$50	USEF Third Level Test 3-Open & Qualifying
33A	133A	$50	USEF Third Level Test 3-JR/YR/AA& Qualifying
41	141	$50	USEF Fourth Level Test 1-Open
41A	141A	$50	USEF Fourth Level Test 1-JR/YR/AA
42	142	$50	USEF Fourth Level Test 2-Open
42A	142A	$50	USEF Fourth Level Test 2-JR/YR/AA
43	143	$50	USEF Fourth Level Test 3-Open & Qualifying
43A	143A	$50	USEF Fourth Level Test 3-JR/YR/AA& Qualifying
44	144	$50	USEF Test of Choice-Open & Qualifying (Training-Fourth)
44A	144A	$50	USEF Test of Choice-JR/YR/AA & Qual. (Training-Fourth)

EVERY CLASS OFFERED HEREIN WHICH IS COVERED BY THE RULES AND SPECIFICATIONS OF THE CURRENT USEF RULEBOOK WILL BE CONDUCTED AND JUDGED IN ACCORDANCE THEREWITH.

We have added a
Pas de Deux Freestyle
Test of Choice
Class #68 & #168

Opportunity Classes
Saturday
Op1-Opportunity Training Test 1
Op2-Opportunity 1st Level Test 1
Op3-Opportunity Prix Caprilli Test/Choice
Prix Caprilli class must have 3 entries to run. Tests are attached to end of prizelist.
Op4-Opportunity USEA Eventing Test/Choice

Sunday
Op101-Opportunity Training Test 2
Op102-Opportunity 1st Level Test 2
Op103-Opportunity 2nd Level Test 1
Op104-Opportunity USEA Eventing Test of Choice

No USEF, USDF membership or drug fees for Opportunity Classes
$50 Class Fee per test
No crossover of horse/rider combination to the regular USEF classes.

45 -	145	$60	USDF Musical Freestyle-Open, AA, JR/YR & Qualifying (Training Freestyles are not qualifying)
46	146	$60	USEF Developing Horse Test of Choice (non qualifying)
47	147	$60	Prix St. Georges-Open, AA, JR/YR & Qualifying
48	148	$60	Intermediate 1-Open, AA, JR/YR & Qualifying
49	149	$60	Intermediate 2-Open, AA, JR/YR & Qualifying
50	150	$60	Intermediate A-Open, AA, JR/YR
51	151	$60	Intermediate B-Open, AA, JR/YR
52	152	$60	Grand Prix-Open, AA, JR/YR & Qualifying
53	153	$60	Grand Prix Special-Open, AA, JR/YR
54	154	$60	FEI Test of Choice-Open & Qualifying (excluding FEI Pony tests)
55	155	$60	FEI Test of Choice-JR/YR/AA & Qualifying (excluding FEI Pony tests)
56	156	$65	FEI Musical Freestyle-Open, AA, JR/YR & Qualifying
57	157	$60	FEI Young Rider Test of Choice-Team Test may be ridden as Qualifying
58	158	$60	FEI Junior Rider Test of Choice-Team Test may be ridden as Qualifying
59	159	$60	USEF 4 Year Old Test
60	160	$60	FEI Young Horse Test of Choice-5,6 & 7 year old
61	161	$60	Para-equestrian Test of Choice
62	162	$60	Para-equestrian Freestyle Test of Choice
63	163	$60	Materiale Fillies & Mares 3/4/5 year old
64	164	$60	Materiale Colts, Stallions & Geldings 3/4/5 year old
65	165	$50	Dressage Seat Equitation
66	166	$50	Amateur Masters USEF Test of Choice-Rider 60 years & Up-May be ridden as Qualifying
67	167	$50	Amateur Masters FEI Test of Choice-Rider 60 years & Up-May be ridden as Qualifying
68	168	$60	USDF Pas de Deux Musical Freestyle Test of Choice

The classes designated as qualifying are the highest test of the Level & Test of Choice classes. Please clearly mark a Q behind your class number for qualifying tests and add $20 to regular class fee.

ENTRIES: All entries must be postmarked by October 26, 2026. Correct fees in full & a copy of all association numbers & a current Coggins Report (within 1 year) must accompany each entry . Visit www.usdf.org/verification to print all your numbers on one page. We will retain the verification page for future shows so you don't have to print it out again.
ENTRY FEES: Office Fee: $50. **USEF/Drug Fee** per horse:$25 ($15 Drug / $10 USEF). **Class Fees as listed above. Qualifying entries add $20** to regular class fee. Please clearly mark a Q behind your class number for qualifying tests.
Non-competing horses must complete an entry & pay a $60 schooling fee plus office fee & stall fee or trailer-in fee.
Class changes approved by management: $10. Competitors, owners, & trainers, who are not members of USDF, the following fees are charged by USDF. **USDF non-member fee**: $55 (trainers are exempt for USDF non-member fee).
Late Entries: All entries must be postmarked on or before the closing date. Late entries will be accepted at the discretion of management and will incur a late fee of $50.
STABLING FEES: Stalls and tack stalls will be assigned on a "first come, first serve" basis by date of entry received. If requested stall area is filled, competitors will be assigned to other stall areas.
Thirty 10 x 10 Climate controlled stalls are $175. High quality permanent (12x12 & 10x12) stalls are $160. Very nice expo stalls (10x10)with doors are $140. Two bags of shavings come with each **Horse** stall. Additional bags delivered to your stall are $9.00 per bag. No outside shavings are allowed. All stalls have rubber matting. Stalls are for Fri-Sun. Additional nights $50 for climate controlled stalls and $45 for all other stalls. All stalls have doors. A grounds fee of $50 per horse per day for non-stabled horses (ship-in fee). Some barns have apartments attached that are available to rent. Please let us know on your entry if you need to be near a specific apartment, cottage or near someone. Limited Paddocks are available for $75 per day. (Limit of 2 horses at a time)

MAKE CHECKS PAYABLE TO ORLANDO DRESSAGE AND MAIL TO THE SHOW SECRETARY:
Carlie Evans- 22806 W Newberry Rd.—Newberry, FL 32669. Or email scanned entry with credit card info to Carlie at orlandodressage@gmail.com. Master Card & Visa accepted with 4% ETF fee. If you are paying with a credit card, please bring the card with you at check-in. **Returned Checks** will incur a $50 return fee, if not rectified within 10 days the matter will be turned over to USEF for disciplinary action.

On line entries are available at www.horsemonkey.com

Refunds before closing date will be issued for amount paid minus the office fee. After closing date stall fees and association fees will be refunded if horse is withdrawn with a vet certificate or rider with a medical certificate before the 1st day of the show. Class fees are not refundable. All fees except office fees are refunded if show is cancelled.
RIDE TIMES: Tentative ride times will be available online at www.orlandodressage.com by Thursday evening, November 5th. All ride times, including the pre-printed show program, are to be considered tentative until noon the day before the show day. Please check your ride times before Noon, November 6th, outside the office on the results board, for scratches and up-to-date times. If you don't have online availability you may call the Show Secretary at 352-215-0710 after November 5th. Show office will be open at Noon on Friday, November 6th.
AWARDS: Ribbons will be awarded first to sixth place. First place winners in classes of 3 or more will receive an award. Grand and Reserve Highscore Award to the highest scores received in each level that has 3 or more riders up to the

lunch break on Sunday. (excluding Freestyle, Young Horse, Para-equestrian). No awards will be mailed unless arrangements have been made through the Secretary.

FREESTYLES*: The Freestyle prerequisites listed in* ***USEF Rule DR129.9****:* ***DR 129.9****: "Except for USEF/USDF Championship classes and for FEI Pony Riders, FEI Junior and FEI Young Rider Freestyles, in order to enter a freestyle class at any level, a horse/rider combination must have received a minimum score of 63% for Training through Fourth levels and 60% for FEI levels in the highest test of the declared freestyle level or any test of a higher level at a Federation /USDF Licensed Dressage Competition or FEI recognized Dressage Competition or "open" Dressage class (i.e. open to all breeds) at a Federation Licensed Competition held prior to the competition where the horse/rider combination is entered to ride a freestyle class. To enter an FEI Para Dressage Freestyle class, a horse/rider combination must have received a minimum score of 60% in any FEI Para Dressage test (Para Novice Test, Para Intermediate Test or Para Grand Prix Test) at the rider's classified Grade. This score may be earned at a USEF/USDF licensed Dressage Competition or FEI recognized Dressage Competition or "open" Dressage class (i.e. open to all breeds) at a Federation Licensed Competition held prior to the competition where the horse/rider combination is entered to ride a freestyle class. A photocopy of the test verifying eligibility, or copy of the USDF score verification, must be submitted with the entry for a freestyle class. All FEI Pony Rider Tests are equivalent to Second Level; all FEI Junior Tests are equivalent to Third Level; all FEI Young Rider Tests are equivalent to PSG; and the USEF Brentina Cup (Young Adult) Test and FEI Young Rider Grand Prix 16-25 Tests are equivalent to Intermediate II. For purposes of freestyle qualification, all are considered equivalent to the highest test of that level and may be used to enter a freestyle at that level or a level below. Young Horse and FEI Children Tests cannot be used for freestyle qualification at any level."*

Musical Freestyles: Riders please submit music to the office before Friday if you would like a sound test on Friday around 5:00 PM. **MP3 files are preferred sent through WhatsApp at 352-406-9886.**

YOUNG HORSE TEST: Will be offered both days (Class #62 & #162 only). This is a test of choice class so please indicate desired test on your entry. These classes are limited to Young Horses as per USEF DR118.5. The judge may announce scores and comments to the spectators.

FOOTING: 300' x 170' covered arena (large enough for 2 rings) with an improved clay/sand mixture. Warm-up outdoor ring with same footing. Three outdoor geo-tech fiber rings. Grass arenas also available if necessary.
All rings will be maintained at an optimum condition.

DIRECTIONS: Finding the Grand Oaks the first time may be challenging, but soon you will realize how easy it is to find and how close it is located to hotels, shopping and restaurants. Please access the map for information.

From the North (Ocala, Summerfield, Belleview) Head South on Hwy 441/27. Go past The Villages Regional Hospital. Go past the overhead bridge that says "The Villages". Turn left at Griffin Avenue (Shell gas station on corner). Stay on Griffin Avenue and pass through one stoplight. Take Griffin Avenue for about two miles and turn left at gated entrance.

From the South: (Leesburg, Tavares, Mount Dora) Head North on Hwy 441/27. Turn left at CR 25 (Racetrac gas station on your left; Water Oak Golf Course is on the right.) Stay on CR 25 and pass under the bridge and pass Post Office. First stoplight is Griffin Avenue. Turn right onto Griffin Avenue. Go for approx. two miles and turn left at gated entrance.

Note: If you have gone too far and have reached the RV Park Entrance, it is okay to enter there also.

RV HOOK-UPS: 45 Full Service RV hook-ups, 30 & 50 amp service. Pull thru spots are also available. Spacious Clubhouse with shower and laundry located at RV area. You can book online at TheGrandOaks.com

ACCOMMODATIONS: There are several cottages and lodges on the property. Please contact Grand Oaks for reservations at (352)750-5500 extension 236. If you have any problems with booking, contact Gayle at 352-406-9886.
There are also several hotels in close proximity of the resort located in The Villages. The closest hotel is the Holiday Inn Express (352) 750-3888. Hampton Inn at the Villages (352)259-8246. Comfort Suites (352) 259-6578. Microtel Inn & Suites (352) 259-0184. Many other hotels are available along with Airbnb's.

GOLF CARTS are available through Grand Oaks. Please call one week ahead to reserve (352)750-5500 extension 236.

VETERINARIAN: On call – names and numbers to be posted at the office & in the show program.

FARRIER: Will be on the show grounds or on call through out the show. Ricky Sredl 352-636-0804.

SHARPS DISPOSAL: Containers are located in each barn.

MANAGEMENT: Show management reserves the right to refuse, accept conditionally and/or cancel awards of prizes without claims for damages & change order of classes, cancel or combine classes at its discretion if entries deem necessary.

Food & Refreshments: The Grand Oaks Bistro with a full menu and bar is open on Thursday-Saturday. Morning coffee, breakfast goodies, snacks and water are always available on Sunday at the office.

DOGS: Dogs are welcomed but must be on a 6' leash at all times! No expandable leashes. Any loose dogs will result in owner being charged $50 that will be donated to the local Humane Society. Any dog becoming a nuisance will be asked to leave the grounds.

Each competitor is responsible for supplying management with correct applicable numbers (USDF and USEF) for horse, owner, rider, and trainer, before the day(s) of the competition.

2027 USDF Regional Adult Amateur Equitation Program: Please note that classes **65 and 165 Dressage Equitation** can be used for qualifying for the 2027 USDF Dressage Seat Medal Semi-Finals (for Juniors), the USDF Young Adult Equitation Regional Finals (for all riders age 19-25), and the USDF Adult Amateur Equitation Semi-Finals (for Adult Amateurs 26 years of age and older), which will be held in conjunction with the 2027 GAIG/USDF Regionals. Riders must earn a qualifying score (70% or higher) in any eligible dressage seat equitation class (except walk/trot), held at a USEF-licensed/USDF-recognized dressage competition. Qualifying period for the USDF DSM Semi-Finals is January 1 through the end of the qualifying period for the regional championships the rider plans on attending. Please visit the USDF website for further information.

United States Equestrian Federation rules are in force from the moment show management allows access to the showgrounds. This includes conduct, correct saddler and equipment, and attire. Exhibitors should also be aware of the USEF rules governing drugs and medications. Questions should be directed to the USEF Drugs and Medication Program.
They may be reached at (800) 633-2472.

PRIX CAPRILLI TESTS: The Prix Caprilli Tests will be offered at Intro with ground poles or Crossrail jumps, Training Level with 18" jumps and First Level with 2' jumps. The tests are located at the end of the prize list. The class must have 3 entries to run the class.

NUMBERS must be worn at all times while a horse is out of their stall.

Motorized Vehicle – GR1301.7 & GR 1301.8 Minors who do not have a valid driver's license which allows them to operate a motorized vehicle in the state in which they reside will not be permitted to operate a motorized vehicle of any kind, including, but not limited to, golf carts, motorcycles, scooters, orfarm utility vehicles, on the competition grounds of licensed competitions. Minors who have a valid temporary license may operate the above-described motorized vehicles as long as they are accompanied by an adult with a valid driver's license. The parent/legal guardian or individual who signs the entry blank as a parent or guardian of a minor operating a motorized vehicle in violation of this rule are solely responsible for any damages, claims, losses or actions resulting from that operation. Violations of this rule will be cause for penalties against those responsible for the child committing the offense. Wheelchairs and other mobility assistance devices for individuals with disabilities are exempt from this rule. The unsafe use of personal electronic transport devices, as determined by the competition officials and management in their sole discretion, that do not require a driver's license to operate, including but not limited to Segways, hover boards, and single wheeled scooters is prohibited on competition grounds. Operating such devices in areas where people gather may be deemed "unsafe use" if there is a risk of harm to others. If the operator of the device is a minor, the parent/legal guardian or individual who signs the entry blank as a parent or guardian of a minor operating the device in violation of this rule is accountable and may be subject to penalties. Wheelchairs and other mobility assistance devices for individuals with disabilities are exempt from this rule.

Membership Statement – GR901.9 Life, senior active and junior active members shall be eligible to participate in all classes at Regular Competitions, Eventing Competitions at the Modified Level or above and Combined Driving Competitions at the Advanced Level, Dressage, Reining and Vaulting Competitions and Endurance Rides. A non-member may participate as a handler, rider, driver, owner, lessee, or agent, at Regular Competitions, Eventing Competitions, Dressage Competitions, Reining Competitions and Combined Driving Competitions upon payment of a Show Pass fee. Participants in the following classes are exempted from the Requirements of this rule: 1) leadline; 2) exhibitions; 3) games and races; 4) classes for 4-H members; 5) walk trot and academy classes (academy classes are classes limited to horses used regularly in a lesson program); 6) USDF introductory level tests, pas de deux and quadrille classes; 7) assistant handlers in Dressage Sport Horse Breeding classes.

Protective headgear –DR120.1.1 Protective Headgear. Protective headgear is defined as a riding helmet, which meets or exceeds current ASTM (American Society for Testing and Materials)/SEI (Safety Equipment Institute) standards for equestrian use and carries the SEI tag. From the time horses are officially admitted to the competition grounds by competition management, anyone mounted on a horse at any time on the competition grounds, including noncompeting riders, riders on non-competing horses, mounted participants in exhibition classes, and those competing in all classes and tests, including Para Dressage tests, must wear protective headgear as defined by this rule and otherwise in compliance with GR801. The harness must be secured and properly fitted. Any rider violating this rule at any time must immediately be prohibited from further riding until the headgear is properly in place. Protective headgear may be the same as or a coordinating color with the coat, and may include contrast coloring, accent, and crystal decoration. See DR136 for dress code rules for exhibitions.

Sharps Container – GR1210.4 Competition management shall place a minimum of one sharps container per each competition, whether or not stabling is provided. Additionally, at least one sharps container per fifty occupied stalls for the disposal of needles and other disposable sharp instruments in convenient locations in barns housing competition horses. It is competition management's responsibility to replace such containers when full and dispose of them properly. Competition management may fine any individuals including trainers, owners, exhibitors, or their agents up to $100 for improper disposal of needles or other sharp disposable instruments. Competition management will place a notice of this requirement either in its prize list or on a specific handout given to trainers on check in at the competition. If local law has different requirements, local law will prevail. Competitions failing to comply with placing the required number of containers on the show grounds will be considered in violation of the rules and may be subject to penalty as determined by the CEO or his designee and/or the Hearing Committee.

Safe Sport Reminder: All USEF Life and Senior Active members, as well as participants who have regular contact with minor athletes, are required to comply with the U.S. Center for SafeSport training requirement to be eligible to participate in the competition. All participants must adhere to the U.S. Center for SafeSport Code, USEF Safe Sport Policy, and the Minor Athlete Abuse Prevention Policies. More information about these can be found at www.usef.org.

Equine Vaccination Rule: GR844 At Federation licensed competitions horses, more than 7 months of age, entering the grounds must be accompanied by documentation of Equine Influenza Virus and Equine Herpes Virus (Rhinopneumonitis) vaccinations within six months prior to entering the stables. Horses not in compliance with this rule may be required to leave the competition grounds upon request by Competition Management

2026

Official Use Only
BRIDLE #

COMPETITION NAME **Dressage under the Oaks IV** COMPETITION DATES **Nov. 7-8, 2006**

NAME OF HORSE	PREVIOUS NAME (IF ANY)	USEF#	USDF#	FOR SALE

BREED	SEX	HEIGHT	COLOR	COGGINS DATE (ENCLOSED COPY)	SIRE	DAM

DAM'S SIRE	COUNTRY OF BIRTH	YEAR OF BIRTH	BREEDER	FEI/PASSPORT #	MICROCHIP #

RIDER/HANDLER _____

USEF# _____ USDF# _____ FEI/LOCAL# _____

ADDRESS _____

CITY/ST/ZIP _____

CELL PHONE _____ JR/YOUNG RIDER BIRTHDAY _____

EMAIL ADDRESS _____

RIDER CITIZENSHIP (IF NOT USA) _____

RIDER STATUS (CIRCLE ONE): JR/YG ☐ AA ☐ OPEN ☐

OWNER _____

USEF# _____ USDF# _____ LOCAL# _____

ADDRESS _____

CITY/ST/ZIP _____

CELL PHONE _____

EMAIL ADDRESS _____

OWNER CITIZENSHIP (IF NOT USA) _____

TRAINER _____

USEF# _____ USDF# _____ LOCAL# _____

ADDRESS _____

CITY/ST/ZIP _____

CELL PHONE _____

EMAIL ADDRESS _____

COACH _____

USEF# _____ USDF# _____ LOCAL# _____

ADDRESS _____

CITY/ST/ZIP _____

Please complete both pages.

CLASS NO.	DIVISION	CLASS DESCRIPTION	QUAL Y/N	FEES

SUBTOTAL CLASS FEES AND QUALIFYING FEES	0
USDF NON MEMBER FEE $55 PER NON-MEMBER	
OFFICE FEE AND/OR BRIDLE # FEE	
USEF HORSE FEES $10 USEF FEE + $15 DRUG FEE = $25.00	
CDI HORSE FEES $10 USEF FEE + $ 25 DRUG FEE = $35.00	
IHP DISCIPLINE FEE ($35 IF REQUIRED)	
STABLING FEES 1 STALL @ $ 0 /STALL	0
TACK STALLS 0 STALL @ $ 0 /STALL	0
BEDDING 0 BALES @ $ 0 /BALE	0
NON COMPETING HORSE FEE	
SPONSORSHIP	
GROUNDS FEE OR OTHER FEES _____	
OTHER _____	
LATE/CHANGE/BANK CHARGES FOR CC	
TOTAL FEES	

Stabling Information & Special Requests: *Please list only ONE name (either individual or barn) for entire group (so we can get everyone together)*

Group/Self	Tue	Wed	Thu	Fri	Sat	Sun	Mon
Stalls							
Tack Stalls							

Stable Group: _____ Contact: _____

USDF

I hereby agree to release, indemnify and hold harmless USDF, its instructors, officers, directors, agents, and volunteers from and against any and all loss, liability or damage arising from or because of, or in connection with, participation in this competition or related activities. I also hereby agree to release, indemnify and hold harmless the competition licensee, show management, competition staff, show committee and members, officers, directors, agents, and volunteers from and against any and all loss, liability or damage arising from or because of, or in connection with, participation in this competition or related activities.

☐ VISA ☐ AMEX CARD NO. _____-_____-_____-_____ EXP DATE _____

☐ MasterCard ☐ Other_____ NAME ON CARD: _____ CVV # _____

BILLING ADDRESS _____ ZIP CODE _____

US EQUESTRIAN FEDERATION

FEDERATION ENTRY AGREEMENT

By entering a Federation-licensed Competition and signing this entry blank as the Owner, Lessee, Trainer, Manager, Agent, Coach, Driver, Rider, Handler, Vaulter or Longeur and on behalf of myself and my principals, representatives, employees and agents, I agree that I am subject to the Bylaws and Rules of the United States Equestrian Federation, Inc. (the "Federation") and the local rules of _____(Competition). I agree to be bound by the Bylaws and Rules of the Federation and of the competition. I will accept as final the decision of the Hearing Committee on any question arising under the Rules, and agree to release and hold harmless the competition, the Federation, their officials, directors and employees for any action taken under the Rules. I represent that I am eligible to enter and/or participate under the Rules, and every horse I am entering is eligible as entered. I also agree that as a condition of and in consideration of acceptance of entry, the Federation and/or the Competition may use or assign photographs, videos, audios, cable - casts, broadcasts, internet, film, new media or other likenesses of me and my horse taken during the course of the competition for the promotion, coverage or benefit of the competition, sport, or the Federation. Those likenesses shall not be used to advertise a product and they may not be used in such a way as to jeopardize amateur status. I hereby expressly and irrevocably waive and release any rights in connection with such use, including any claim to compensation,invasion of privacy, right of publicity, or to misappropriation.

If not currently a USEF Active Competing member or Subscriber and competing only in classes that are exempt from membership requirements, I acknowledge and agree that I will be enrolled at no cost as a USEF Fan and my USEF Fan Account will continue to annually automatically renew unless and until USEF determines in its sole discretion to terminate my Fan account. Additionally, I acknowledge that the benefits of a USEF Fan are subject to change without notice. The construction and application of Federation rules are governed by the laws of the State of New York, and any action instituted against the Federation must be filed in New York State.

BY SIGNING BELOW, I AGREE that I have read, understand, and agree to be bound by all applicable Federation Bylaws, rules, and policies including the USEF Safe Sport Policy and Minor Athlete Abuse Prevention Policies (MAAPP) as published at www.usef.org, as amended from time to time, as well as all terms and provisions of this Prize List. If I am signing and submitting this Agreement electronically, I acknowledge that my electronic signature shall have the same validity, force and effect as if I affixed my signature by my own hand.

RIDER/DRIVER/HANDLER/VAULTER/LONGEUR (mandatory)

Signature: _____

Print Name: _____

OWNER/AGENT (mandatory)

Signature: _____

Print Name: _____

TRAINER (mandatory)

Signature: _____

Print Name: _____

COACH (if appicable)

Signature: _____

Print Name: _____

Parent/Guardian Signature: (Required if Rider/Driver/Handler/Vaulter/Longeur is a minor) _____

Print Parent//Guardian Name: _____ Emergency Contact Phone No. _____

Is Rider/Driver/Vaulter a U.S. Citizen: __Yes __ No

Revised 5/22/2025

WAIVER AND RELEASE OF LIABILITY,
ASSUMPTION OF RISK AND INDEMNITY AGREEMENT

For and in consideration of United States Equestrian Federation, Inc. dba US Equestrian ("USEF") allowing me, the undersigned, to participate in any capacity (including as a rider, driver, handler, vaulter, longeur, lessee, owner, agent, coach, official, trainer or volunteer) in a USEF sanctioned, licensed or approved event or activity, including but not limited to equestrian clinics, practices, shows, competitions and related or incidental activities and _____(**"USEF Event"** or **"USEF Events"**); I, for myself, and on behalf of my spouse, children, heirs and next of kin, and any legal and personal representatives, executors, administrators, successors, and assigns, hereby agree to and make the following contractual representations pursuant to this Agreement (the **"Agreement"**):

A. RULES AND REGULATIONS: I hereby agree that I have read, understand, and agree to be bound by all applicable Federation Bylaws, rules, and policies including the USEF Safe Sport Policy and Minor Athlete Abuse Prevention Policies (MAAPP) as published at www.usef.org, as amended from time to time.

B. ACKNOWLEDGMENT OF RISK: I knowingly, willingly, and voluntarily acknowledge the inherent risks associated with the sport of equestrian and know that horseback riding and related equestrian activities are inherently dangerous, and that participation in any USEF Event involves risks and dangers including, without limitation, the potential for serious bodily injury (including broken bones, head or neck injuries), sickness and disease (including communicable diseases), trauma, pain & suffering, permanent disability, paralysis and death; loss of or damage to personal property (including my mount & equipment) arising out of the unpredictable behavior of horses; exposure to extreme conditions and circumstances; accidents involving other participants, event staff, volunteers or spectators; contact or collision with other participants and horses, natural or manmade objects; adverse weather conditions; facilities issues and premises conditions; failure of protective equipment (including helmets); inadequate safety measures; participants of varying skill levels; situations beyond the immediate control of the USEF Event organizers and competition management; and other undefined, not readily foreseeable and presently unknown risks and dangers **("Risks")**.

WARNING:
Under Florida law, an equine activity sponsor or equine professional is not liable for an injury to, or the death of, a participant in equine activities resulting from the inherent risks of equine activities.

C. ASSUMPTION OF RISK: I understand that the aforementioned Risks may be caused in whole or in part or result directly or indirectly from the negligence of my own actions or inactions, the actions or inactions of others participating in the USEF Events, or the negligent acts or omissions of the Released Parties defined below, and I hereby voluntarily and knowingly assume all such Risks and responsibility for any damages, liabilities, losses, or expenses that I incur as a result of my participation in any USEF Events. I also agree to be responsible for any injury or damage caused by me, my horse, my employees or contractors under my direction and control at any USEF Event.

D. WAIVER AND RELEASE OF LIABILITY, HOLD HARMLESS AND INDEMNITY: In conjunction with my participation in any USEF Event, I hereby release, waive and covenant not to sue, and further agree to indemnify, defend and hold harmless the following parties: USEF, USEF Recognized Affiliate Associations, the United States Olympic & Paralympic Committee (USOPC), USEF clubs, members, Event participants (including athletes/riders, coaches, trainers, judges/officials, and other personnel), the Event owner, licensee, and competition managers; the promoters, sponsors, or advertisers of any USEF Event; any charity or other beneficiary which may benefit from the USEF Event; the owners, managers, or lessors of any facilities or premises where a USEF Event may be held; and all directors, officers, employees, agents, contractors, and volunteers of any of the aforementioned parties **(Individually and Collectively, the "Released Parties" or "Event Organizers")**, with respect to any liability, claim(s), demand(s), cause(s) of action, damage(s), loss, or expense (including court costs and reasonable attorney fees) of any kind or nature **("Liability")** which may arise out of, result from, or relate in any way to my participation in the USEF Events, including claims for Liability caused in whole or in part by the negligent acts or omissions of the Released Parties.

E. COMPLETE AGREEMENT AND SEVERABILITY CLAUSE: This Agreement represents the complete understanding between the parties regarding these issues and no oral representations, statements or inducements have been made apart from this Agreement. If any provision of this Agreement is held to be unlawful, void, or for any reason unenforceable, then that provision shall be deemed severable from this Agreement and shall not affect the validity and enforceability of any remaining provisions.

I HAVE CAREFULLY READ THIS DOCUMENT IN ITS ENTIRETY, UNDERSTAND ALL OF ITS TERMS AND CONDITIONS, AND KNOW IT CONTAINS AN ASSUMPTION OF RISK, RELEASE AND WAIVER FROM LIABILITY, AS WELL AS A HOLD HARMLESS AND INDEMNIFICATION OBLIGATIONS.

By signing below, that I have read, understand, and agree to be bound by all applicable Federation Bylaws, rules, and policies including the USEF Safe Sport Policy and Minor Athlete Abuse Prevention Policies (MAAPP) as published at www.usef.org, as amended from time to time, as well as all terms and provisions of this Prize List. If, despite this Agreement, I, or anyone on my behalf or the minor's behalf, makes a claim for Liability against any of the Released Parties, I will indemnify, defend and hold harmless each of the Released Parties from any such Liabilities as the result of such claim.

The parties agree that this agreement may be electronically signed. The parties agree that the electronic signatures appearing on this agreement are the same as handwritten signatures for the purposes of validity, enforceability, and admissibility.

☐ **RIDER/DRIVER/HANDLER/VAULTER/LONGEUR** ☐ **OWNER** ☐ **TRAINER** ☐ **OFFICIAL** ☐ **STAFF** ☐ **VOLUNTEER** ☐ **COACH** (IF APPLICABLE)

Signature: _____ Date: _____ Print Name:_____

Parent/Guardian Signature: (Required if Rider/Driver/Handler/Vaulter/Longeur is a minor) _____Date:_____

Print Parent//Guardian Name:_____Emergency Contact Phone No._____

11.16.23

© United States Equestrian Federation® All rights reserved. Reproduction without permission is strictly prohibited.

A Big Thank You to our Sponsors!

MAIN LAW FIRM

SunSpree
SUNSPREETACK.COM
352-222-0712

CLIFFORD L. SHOVER BUILDER, INC.

"Building for generations"

Commercial, residential and additions

601 McKenzie Road, Lake Helen, FL 32744 - 386-566-0281

And Our Generous Friends of Dressage

Mike and Janet Buckner
in Memory of Deborah Tarantino

Horse Shows in the Park

Ashmore Equestrian Center

Laura Joseph

This competition is recognized by USDF for 2027

USDF Membership Benefits: USDF is dedicated to education, the recognition of achievement, and promotion of dressage. For details on member benefits, including educational programs, awards, and other opportunities, refer to the *USDF Member Guide* or the USDF website at www.usdf.org.

Membership Requirements for USEF-licensed/USDF-recognized Competitions: Owners and riders, including foreign riders and owners who are not residents of the US, wishing to participate in a USEF-licensed/USDF-recognized competition as a rider or owner/lessee, must have either a USDF Group Membership (GM), Participating Membership (PM), or have a USDF Non-Member (NM) identification number and pay the USDF Non-Member (NM) fee. (Note: USDF Business Members can own horses but cannot compete as riders with their USDF Business Membership.)

Horses competing at USEF-licensed/USDF-recognized competitions must have either a USDF Horse Identification (HID) number or a USDF Lifetime Horse Registration (LHR). Proper credentials or verification certificates must be presented to the competition secretary.

Riders and owners wishing to participate in a USEF-licensed/USDF-recognized competition, and not able to present the competition secretary with verification of a USDF membership or NM identification, and USDF LHR or USDF HID, must complete a USDF Competition Affidavit Form and pay the $5 affidavit filing fee. A copy of a completed affidavit form from another competition may also be used for verification purposes for up to 60 days. (Exception: Affidavits cannot be used at Great American Insurance Group/USDF Regional Dressage Championships.)

Exceptions:

- Horses competing only in Individual Breed Classes (IBCs) at DSHB competitions, sires and dams of horses in DSHB group classes, where those sires or dams are not actually competing in the same competition, horses competing only in breed restricted dressage or DSHB classes at Regular Competitions (e.g. all Arabian, all Friesian, or all Morgan classes), or in USDF Introductory Level tests, pas de deux or quadrille, are exempt from this requirement. Also exempt are horses ridden in leadline, exhibitions, games and races, classes for 4-H members, walk-trot, academy, and opportunity classes.
- Riders and owners/lessees competing only in classes which are exempt from the USDF HID requirements are also exempt from the USDF NM identification number and NM fee requirements. Also exempt are handlers of horses competing in DSHB In-Hand or Group classes.

Memberships Defined

Participating Membership (PM): A membership issued to an individual directly by USDF. The membership year is December 1 through November 30. PMs are available for 1-year ($100), 5-years ($400), or life ($2,000). A USDF Youth Participating Membership (YPM) is available for individuals who have not reached their 21st birthday by December 1 of the current membership year ($80). A PM allows the member to compete at USEF-licensed/USDF-recognized competitions and to participate as a rider and/or owner/lessee for all Adequan®/USDF Year-End Awards and the Great American Insurance Group/USDF Regional Dressage Championship program.

Group Membership (GM): A membership issued to an individual by USDF when the member name and dues are submitted to USDF through an affiliate Group Member Organization (GMO). The GM year begins December 1 and ends November 30. A GM allows the member to compete at USEF-licensed/USDF-recognized competitions and participate in the USDF Rider Awards Program.

Business Membership (BM): A membership that runs December 1 through November 30 and is issued to a business or organization directly by USDF. The USDF BM ($280) offers a wider variety of advertising benefits. BMs satisfy requirements of horse ownership only.

Non-Member (NM) Identification Number: For each USDF NM owner/lessee and USDF NM rider there will be a USDF NM fee of $55 per competition that must be collected by the show secretary and submitted to USDF, along with the USDF Report of Fees document and the $5 affidavit fee and Competition Affidavit Form if the person cannot provide a copy of their USDF NM card. Owners/lessees or riders exempt from the NM number requirements are also exempt from paying the USDF NM fee. If there are multiple owners of a horse and all are NMs, only one of the owners must pay the NM fee. If the horse has at least one owner who is a current USDF PM, GM, or BM there is no NM fee assessed. Competition management will be invoiced for all applicable USDF NM fees not received with the USDF post-competition paperwork, along with a report listing all USDF NMs. Competition management is then required to submit the NM fees within 30 days to the USDF. An individual with a USDF NM identification number is not eligible for any USDF membership benefits. Once a USDF NM number has been assigned, a USDF NM card can be obtained from the USDF website.

Horse Identification (HID) Number: A one-time tracking number for horses ($45). Scores earned by a horse with an HID number will be recorded but will NOT be counted towards Adequan®/USDF Year-End Awards. A horse with an HID number is not eligible to compete in Great American Insurance Group/USDF Regional qualifying or championship classes. An HID number can be upgraded to a Lifetime Horse Registration (LHR) for a fee of $95. If a horse has a USDF LHR it does not need an HID number. An HID number is a one-time fee that does not need to be renewed.

Lifetime Horse Registration (LHR): A horse with an LHR ($140) is eligible for Adequan®/USDF Year-End Awards, and eligible to compete in Great American Insurance Group/USDF Regional qualifying and championship classes, assuming requirements for the owner and rider are met. If a horse has an LHR it does not need an HID number. An LHR does not need to be renewed.

How to Join USDF

Applications for USDF Participating Membership (PM), Business Membership (BM), Horse Identification (HID) number, and Lifetime Horse Registration (LHR) may be found in the following locations:

- On the USDF website: www.usdf.org. You can submit the application online or download the form.
- In the show office at USEF-licensed/USDF-recognized competitions classified by USEF as Dressage Competitions, and Regular Competitions which are open to all breeds.
- By calling the USDF office at (859) 971-2277, 4051 Iron Works Parkway, Lexington, KY 40511

The effective date of membership is the date the form and correct fees are received in the USDF office or, if applying at a competition, the date accepted by the competition secretary, provided the application is signed and dated by the competition secretary, member, and/or horse owner on that same day.

2027 Great American Insurance Group/USDF Regional Dressage Championships

A single Regional Dressage Championship program organized by the United States Dressage Federation (USDF), and recognized by the United States Equestrian Federation, Inc. (USEF), will be held in each of the nine USDF regions. The Regional Championship Program Rules can be found on the USDF website at www.usdf.org. Please refer to the 2027 USDF Member Guide for the comprehensive list of rules and requirements for this program.

Membership/Registration Requirements for Qualifying and Championships

All memberships and registrations/recordings must be correct and current at the time qualifying scores are earned and at the time of the championships.

Rider:

- Must have a USDF Participating* Membership (PM).
- Must have a USEF membership (Active or Life).

Horse:

- Must have a USDF Lifetime Horse Registration (LHR).
- Must have a USEF (Annual or Lifetime) Horse Recording.
- USDF horse registration and USEF horse recording must be in the name(s) of the current owner(s) or lessee(s). A horse is not required to have breed registry papers.
- Horses must be entered in qualifying and championship classes under their official recorded names and ownership as specified in USEF GR1102.3, and transfers of ownership or lease registrations must be completed in compliance with USEF rules GR1105 and GR1108 prior to the competition in order for the horse to compete under the name of the new owner or lessee. (USEF DR127.2)

Owner:

- Must have a USDF Participating or Business Membership and a USEF membership (Active or Life Membership or Annual Recorded Farm/Business (with Senior Active Competing Farm Owner in good standing). If the horse has more than one owner, at least one owner must have both active USEF membership and active USDF Participating or Business Membership and must be the owner of record with USEF and USDF. For a business or farm to be the valid owner under this requirement, it must be listed as an owner of the horse with both USEF and USDF.

* PMs are USDF members who join USDF directly. USDF Group Members (GM) are ineligible.

Minimum Qualifying Scores: One set of nationally-standardized qualifying scores has been established for all USEF/USDF Regional Championships, for Training Level through Grand Prix, in three divisions: open, adult amateur and junior/young rider. The minimum percentages are as follows:

	OPEN	AA	JR/YR
Training Level (Test 3)	68%	63%	63%
First Level (Test 3)	66%	62%	62%
Second Level (Test 3)	64%	61%	61%
Third Level (Test 3)	62%	60%	60%
Fourth Level (Test 3)	62%	60%	60%
Prix St. Georges	62%	60%	60%
Intermediate I	62%	60%	60%
Intermediate II	62%	60%	60%
Grand Prix	60%	60%	60%

FREESTYLE	OPEN/Jr/YR	AA
First Level	65%	65%
Second Level	65%	65%
Third Level	65%	65%
Fourth Level	65%	65%
Intermediate I	65%	65%
Grand Prix	65%	65%

PRIX CAPRILLI INTRODUCTORY LEVEL TEST-GROUND POLES

#

Prix Caprilli Test is for horses with jumping experience, ridden in snaffle bridle, competing at the Introductory Level and above. Test will be performed in 20x60 meters dressage arena. Maximum height of fences for this class is Ground Poles. All trot work will be performed rising. The horse should be asked to change though the trot. The quality of the change will be evaluated. Test may be called. Refusals and knock-downs will be penalized as an error of course with appropriate deduction of points. Knock-downs will be penalized at the judge's discretion. In the case of a rail in the path, the judge will ring the bell for the rider to stop without penalty. After the jump is replaced, the bell will be rung again telling the rider to continue from where he stopped. Score will be calculated in percentage.

Movement	Points	Co-Eff.	Total	Comments
1. A Enter working trot rising X Halt thru walk. Salute. Proceed working trot				
2. C Track right				
3. A 20 meter circle right-Working trot				
4. E 15 meter half circle right & over fence #1 Proceed Working trot to F		X 2		
5. A-K Between A & K Medium Walk				
6. K-B Change diagonal Free walk				
7. M Working trot				
8. C 20 meter circle left				
9. C Straight ahead				
10. E 15 meter half circle left and over fence #1 Proceed Working trot to K		X 2		
11. A Down Centerline				
12. X Halt thru walk. Salute. Leave arena on a long rein.				

General Impressions

Gaits and Jumping Style		x2	
Impulsion		x2	
Submission		x2	
Rider Position, Effectiveness		x3	

Additional Comments

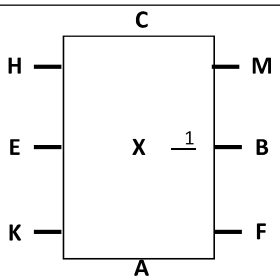

Penalties for Prix Caprilli: All refusals are treated as errors of course. Knock-downs or errors of course are treated as errors of test with a deduction of one or two points at each occurrence, depending on severity.

Errors of Course:
1st error- 2 point deduction
2nd error- 4 point deduction
3rd error- Elimination

Possible Points: 230

Earned Points _____

Total Errors _____

Final Score _____

Percentage _____

Judge's Signature _____

Revised 10/25

PRIX CAPRILLI INTRODUCTORY LEVEL TEST-CROSSRAILS

#

Prix Caprilli Test is for horses with jumping experience, ridden in snaffle bridle, competing at the Introductory Level and above. Test will be performed in 20x60 meters dressage arena. Maximum height of fences for this class is Crossrails. All trot work will be performed rising. The horse should be asked to change though the trot. The quality of the change will be evaluated. Test may be called. Refusals and knock-downs will be penalized as an error of course with appropriate deduction of points. Knock-downs will be penalized at the judge's discretion. In the case of a rail in the path, the judge will ring the bell for the rider to stop without penalty. After the jump is replaced, the bell will be rung again telling the rider to continue from where he stopped. Score will be calculated in percentage.

Movement	Points	Co-Eff.	Total	Comments
1. A Enter working trot rising X Halt thru walk. Salute. Proceed working trot				
2. C Track right				
3. A 20 meter circle right-Working trot				
4. E 15 meter half circle right & over fence #1 Proceed Working trot to F		X 2		
5. A-K Between A & K Medium Walk				
6. K-B Change diagonal Free walk				
7. M Working trot				
8. C 20 meter circle left				
9. C Straight ahead				
10. E 15 meter half circle left and over fence #1 Proceed Working trot to K		X 2		
11. A Down Centerline				
12. X Halt thru walk. Salute. Leave arena on a long rein.				

General Impressions

Gaits and Jumping Style		x2	
Impulsion		x2	
Submission		x2	
Rider Position, Effectiveness		x3	

Additional Comments

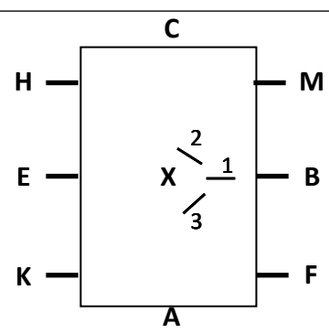

Penalties for Prix Caprilli: All refusals are treated as errors of course. Knock-downs or errors of course are treated as errors of test with a deduction of one or two points at each occurrence, depending on severity.

Errors of Course:
1st error- 2 point deduction
2nd error- 4 point deduction
3rd error- Elimination

Possible Points: 230

Earned Points _____

Total Errors _____

Final Score _____

Percentage _____

Judge's Signature _____

Revised 10/25

PRIX CAPRILLI TRAINING LEVEL TEST -18"

No.

Prix Caprilli Test for Horses with jumping experience competing at Training Level and above. Test will be performed in 20x60 meters dressage arena. Maximum height of fences 2'6". All trot work will be performed rising. The horse should be asked to change though the trot. The quality of the change will be evaluated. Test may be called. Refusals and knock-downs will be penalized as an error of course with appropriate deduction of points. Knock-downs will be penalized at the judge's discretion. In the case of a knocked-down rail in the path, the judge will ring the bell for the rider to stop without penalty. After the jump is replaced, the bell will be rung again telling the rider to continue from where he stopped. Score will be in percentage.

		Movement	Points	Co-Eff.	Total	Comments
1.	A C	Enter working trot. Halt, Salute. Proceed working trot. Track right. *at X*				
2.	MXK	Change rein over fence #1. Return to working trot.				
3.	A	Circle left 20 meters.				
4.	After A	Turn onto quarter line and jump Fence #2. Return to working trot.				
5.	C	Medium walk.				
6.	HB	Free walk		X2		
7.	B	Medium walk.				
8.	F	Working trot.				
9.	Between A & K	Working canter right lead.				
10.	KXM	Change rein and jump Fence #1, landing in working canter.				
11.	M	Working trot.		X2		
12.	Between C & H	Working canter left lead.				
13.	E	Half 15-meter circle and jump Fence #2, proceed straight ahead.				
14.	Opposite M	Working trot, track left.				
15.	C	Circle left 20 meters letting the horse gradually take the reins out of hands at working trot rising. Before C gradually take up reins.				
16.	HXF	Change rein and jump Fence #3. Return to working trot before F.				
17.	A X	Down center line. Halt, salute. Leave arena at free walk.				

General Impressions

Gaits and Jumping Style		**x2**	
Impulsion		**x2**	
Submission		**x2**	
Rider: Position, Effectiveness		**x3**	

Judge's Comments:

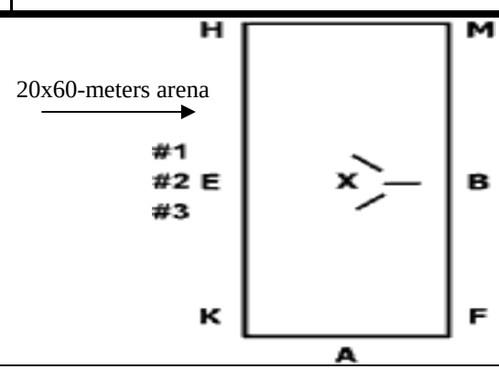

Penalties for Prix Caprilli:
All refusals are treated as errors of course.

Knock-downs or errors of course are treated as errors of test with a deduction of one or two points at each occurrence, depending on severity.

Errors of Course:
1st error, 2 point deduction
2nd error, 4 point deduction
3rd error, Elimination

Possible Points: **260**

Earned Points _____

Total Errors _____

Judge's signature _____

PRIX CAPRILLI FIRST LEVEL TEST -2'

No.

Prix Caprilli Test for horses with jumping experience competing First Level and above. Test will be performed in 20x60 meters dressage arena. Maximum height of fences 2'9". Trot work may be done rising or sitting. The horse may do flying changes or change lead though the trot. The quality of the change will be evaluated. Test may be called. Refusals will be penalized as an error of course with appropriate deduction of points. Knock-downs will be penalized at the judge's discretion. In the case of a knocked-down rail in the path, the judge will ring the bell for the rider to stop without penalty. After the jump is replaced, the bell will be rung again telling the rider to continue from where he stopped. Score will be calculated in percentage.

		Movement	Points	Co-Eff.	Total	Comments
1.	A	Enter working trot.				
2.	X	Halt. Salute. Proceed working trot.				
3.	C	Track left.				
4.	E	Half 15-m. circle to Jump #2. After Fence #2 proceed straight ahead at working canter left lead.				
5.	HXF	Change rein over Fence #3 in working canter.				
6.	F	Working trot.				
7.	A	10m. circle working trot sitting.				
8.	KEH	Lengthen stride in trot.				
9.	H	Working trot.				
10.	M	Leg yield right to quarter line and jump Fence #2.				
11.	F	Working trot.				
12.	A	Halt 5 seconds. Proceed working walk.				
13.	KB	Free walk.		X2		
14.	B	Working walk.				
15.	M	Working trot.				
16.	C	Working canter. Left lead.				
17.	HEK	Lengthen stride in canter.				
18.	K	Working canter.				
19.	FXH	Change rein over Fence #3. Change lead through trot or canter				
20.	MBF	Lengthen canter.				
21.	F	Working canter.				
22.	E	Half 15-m. circle right over Fence #2				
23.	E	Straight ahead at working canter right lead.				
24.	MXK	Change rein over Fence #1.				
25.	K	Working trot.				
26.	F	Leg yield left to quarter line, over Fence #2.				
27.	M	Working trot.				
28.	E Before E	Circle 20m, letting the horse gradually take the reins to stretch down, nose out, at working trot rising. Gradually take up the reins.				
29.	E	Straight ahead at working trot sitting.				
30.	A	Center line working trot sitting.				
31.	X	Halt. Salute. Leave arena free walk.				

General Impressions

Gaits and Jumping Style	**x2**		
Impulsion	**x2**		
Submission	**x2**		
Rider: Position, Effectiveness	**x3**		

Additional Comments:

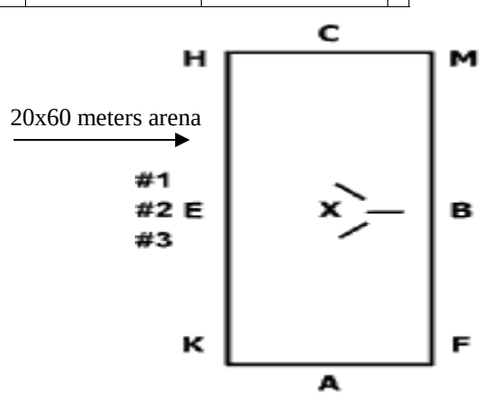

Penalties for Prix Caprilli:
All refusals are treated as errors of course.

Knock-downs or errors of course are treated as errors of test with a deduction of one or two points at each occurrence, depending on severity.

Errors of Course:
1st error, 2 point deduction
2nd error, 4 point deduction
3rd error, Elimination

Possible Points: **400**

Earned Points _____

Total Errors _____

Final Score _____

Percentage _____

Judge's signature _____

USEF Competition Name: **Dressage under the Oaks IV** USEF#: **332656**

Competition Division(s) and Rating(s):

Dressage Level 2

MAAPP

MINOR ATHLETE ABUSE PREVENTION

LEARN ABOUT MAAP POLICIES

- Safe Sport Training
- Travel
- One-On-One Interactions
- Social Media & Electronic Communications

Read about these & more at usef.org/MAAPP

REPORT MAAP POLICY VIOLATIONS

usef.org/safe-sport/reporting

Text or WhatsApp Anonymously 2USEF(28733)

US EQUESTRIAN | U.S. CENTER FOR SAFESPORT